SMT SWEDMILL

MILLING

VHF-380 TI

CONTROLS

HEIDENHAIN
TNC-620 or TNC-640

SIEMENS
828D or 840D

FANUC
0iMD - Manual Guide i

SMT SWEDMILL VHF-380 TI

Vertical/Horizontal Milling Machine
Unique design for optimal flexibility.

> Simple manual machining
> Combined manual/CNC with easy pre-programmed cycles.
> Full CNC machining 3-5 axis

All-In-One

Note ! The machine in the picture is equipped with options

STANDARD EQUIPMENT

- Hardened & ground guide ways in all axes
- Heidenhain optical scales in 3 axes
- High precision ballscrews in X Y Z
- High torque spindle motor 7,5 kW
- Stepless feed rate manual & CNC
- Mechanical & electronical handwheel
- Open-door Manual machining
- ABENE pre-programmed Easy-Cycles
- Complete coolant system
- Automatic central lubrication system
- 2-step automatic gearbox, digitally controlled spindle speeds
- Spare parts book & Accuracy report
- CE-guarding, table-mounted
- Controlled spindle speeds
- Machine lamp 24V LED
- Keys and manuals
- Control Heidenhain TNC-620

Heidenhain TNC-620
Electronic handwheel HR510
Connections: USB & RJ45

Right side

Left side

OPTIONS

TOOL CLAMPING
PD-100 : Air Power Drawbar
TCS-300: Hydraulic clamping universal with pull studs for:
DIN 2080/69871 & BT40.

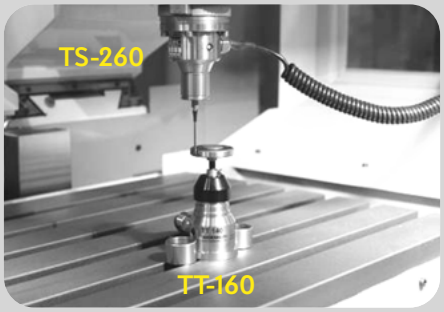

MEASURING DEVICES
TS-260: Touchprobe for workpiece measurements.
TT-160: Probe for tool measuring.

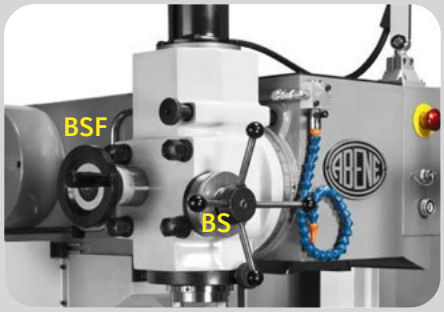

SPINDLE HEAD TYPES
BS: Boring spindle, pinole movement 75 mm.
BSF: Extra handwheel for fine executions, 1 turn / 3 mm.

HORIZONTAL MACHINING
Arbor Support: to support horizontal machining with long arbors.

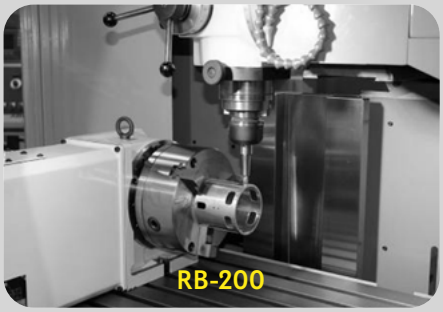

ADDITIONAL MACHINING AXIS
RB-200: Full axis CNC rotary table, to be used as A, B or C axis.
Tail-stock and chuck.

OTHER EXTRAS
Pads: Adjustable M16, 120 mm/diam.
Machine vices: Different sizes, to be advised.

MILLING PERFORMANCE

VERTICAL POSITION (FIXED)
Spindle head locked with a precision index-pin, and head stock/over-arm in upper position.
Spindle–table surface: 20-495 mm

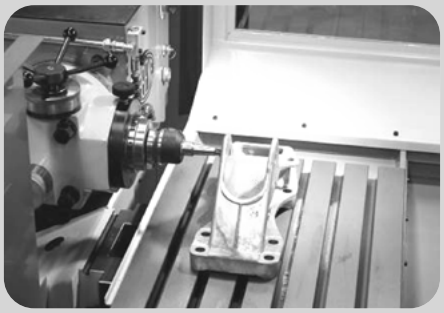

HORIZONTAL POSITION (FIXED)
Spindle head locked with a precision index-pin, and head stock/over-arm in lower position.
Spindle–table surface: 75-550 mm

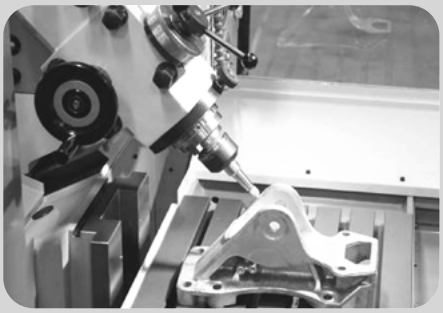

ANY POSITION (STEPLESS)
The spindle head is possible to lock in any position inside 1400 and mill/drill in any angle.

The machine is built according to the unique ABENE "angular frame plane" design concept, which has the spindle head sideways mounted. This radical (World Exclusive) feature allows rapid and precise uniform changing from Vertical to Horizontal mode. The ergonomically positioned handles, along with the benefits of the standard Heidenhain control TNC-620, (also available with Fanuc or Siemens controls) allows the VHF-380 TI to let you decide how to best turn your idea into a presentable product with maximum economy and efficiency.

SOFTWARE PERFORMANCE (TNC620)

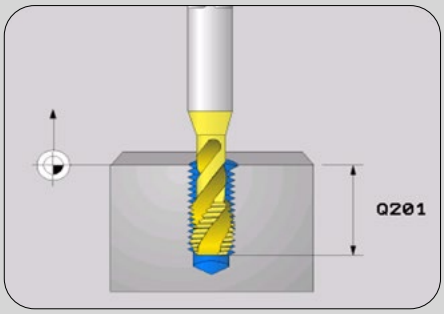

ABENE CYCLES
Easy to use all-in-one cycles for most operations, developed in cooperation with Heidenhain.

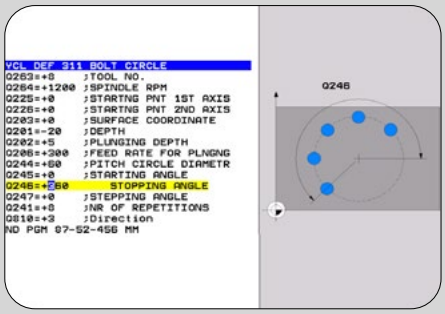

ALL-IN-ONE
With ABENE Cycles, where you choose what to do, which tool to use and where to do it. The machine does the rest.

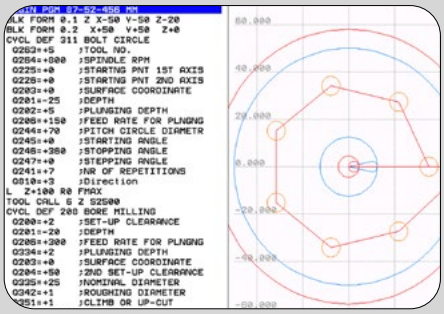

FLEXIBILITY
Combine ABENE Cycles freely with conventional Heidenhain cycles & programming or just use one cycle alone, as a complete program.

EASY CYCLES

- Pre positioning
- Drilling
- Drilling – Circular pattern
- Drilling – Linear pattern
- Circular pocket
- Rectangular pocket
- Face milling
- Slot milling
- Tapping
- Rigid Tapping
- Tapping circular pattern
- Tapping linear pattern
- Rigid Tapping circular pattern
- Rigid Tapping linear pattern

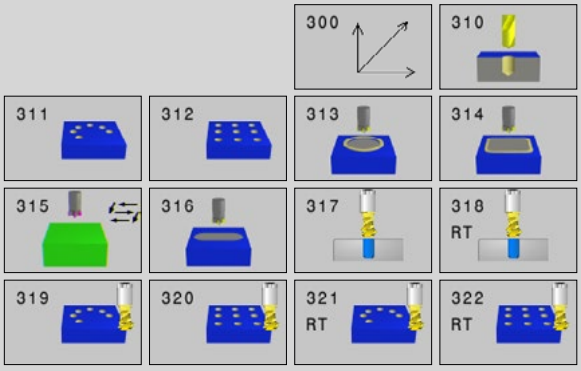

VHF-380 TI

TECHNICAL DATA

TECHNICAL INFO

	VHF-380 TI	VHF-380 TI/BS	UNIT
TABLE			
Table Horizontal	900 x 500	900 x 500	mm
T-slot	7 x 14 H7	7 x 14 H7	mm
Max Load	350	350	Kg
MOVEMENT			
Longitudinal	800	800	mm
Cross	500	500	mm
Vertical	475	475	mm
Feed Stepless (Z)	Stepless	Stepless	
Rapid feed X,Y	6000	6000	mm/min
Rapid feed Z	3000	3000	mm/min
Feed.motor X,Y,Z	4,2 (13)	4,2 (13)	Nm
ACCURACY			
Positioning	+/- 0,001	+/- 0,001	mm
Repeability	+/- 0,005	+/- 0,005	mm
SPINDLE			
Spindle speed	55-4000	55-4000	rpm
Spindle	ISO40 / DIN2080	ISO40 / DIN2080	
Spindle speeds n:o	Automatic	Automatic	2 Steps
Spindle power	7,5	7,5	kW
Spindle head swivel	0-140	0-140	degrees
Spindle quill	--	75	mm
Hand wheel	--	3 (option)	mm/rev.
INSTALLATION DATA			
Power requirement	25/17	25/17	A/kVA
Air (if tool clamping)	6	6	Bar
Dimensions LxWxH	2300x2450x2200	2300x2450x2200	mm
Gross weight	2850	2850	kg
Net weight	2650	2650	kg

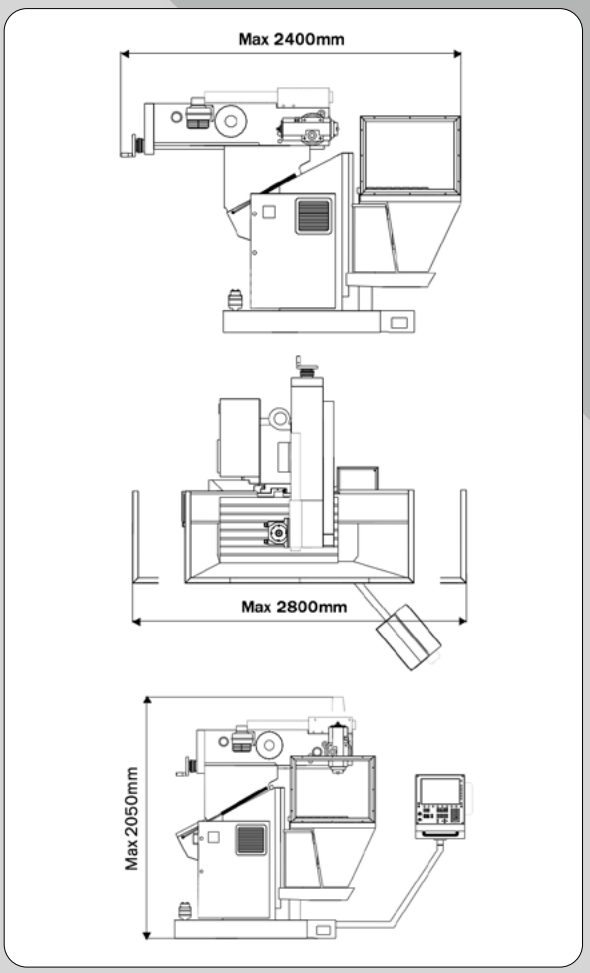

SPINDLE DIAGRAM STEP 1

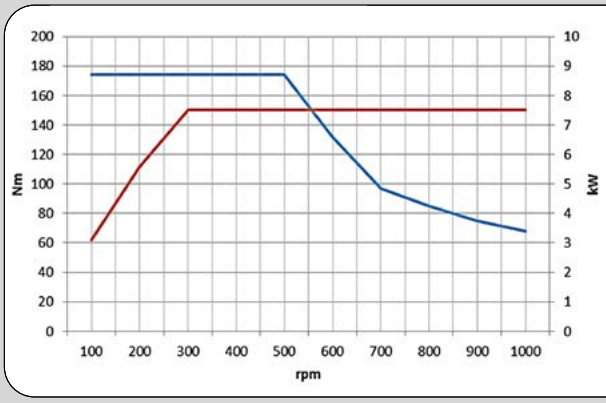

SPINDLE DIAGRAM STEP 2

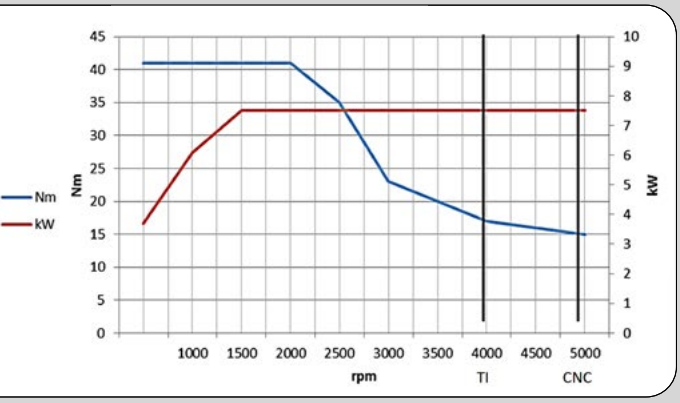

Contact

HEADQUARTER & PRODUCTION SITE

Swedish Machine Tool Company AB
Främmestadvägen 29
465 97 Främmestad
Sweden

SALES & SERVICE OFFICES

Köping - Varberg - Valdemarsvik

+46 (0)21 - 80 51 00
sales@smtcompany.se
service@smtcompany.se